CAPACITOR KE- 2000

Application:
Self-healing metallized dielectric capacitor, impregnated with biodegradable, ambient compatible, NON-PCB dielectric fluid.

Technical data:

Rated capacitance	2000 µF
Capacitance tolerance	± 10%
Dissipation factor at f = 50 Hz	$< 10^{-3}$
Rated voltage	900 V DC
Max voltage at f=50 Hz	200 V AC
Repetitive peak voltage	1600 V DC
Max current	160 A
Repetitive peak current	12 kA
Non repetitive peak current	22 kA
Electrical strength:	
- between terminals	1800 V DC/ 10 s
- between interconnected terminals and casing	15000 V AC / 60 s
Climatic category	-40 ÷ +60°C
Impregnant:	NON PCB and chlorides
Pressure switch:	0,1 A/ 24 V close contact, test VDE to casing 1250VDC

Stainless steel casing, terminations: under screw M12.

MITRA
Ltd
99-300 Kutno; 1 Grunwaldzka St.
Poland
tel./fax: +48 24 253 60 71
tel. +48 24 355 13 36
http://www.mitra.com.pl
e-mail: mitra@mitra.com.pl

CAPACITOR KE- 2000

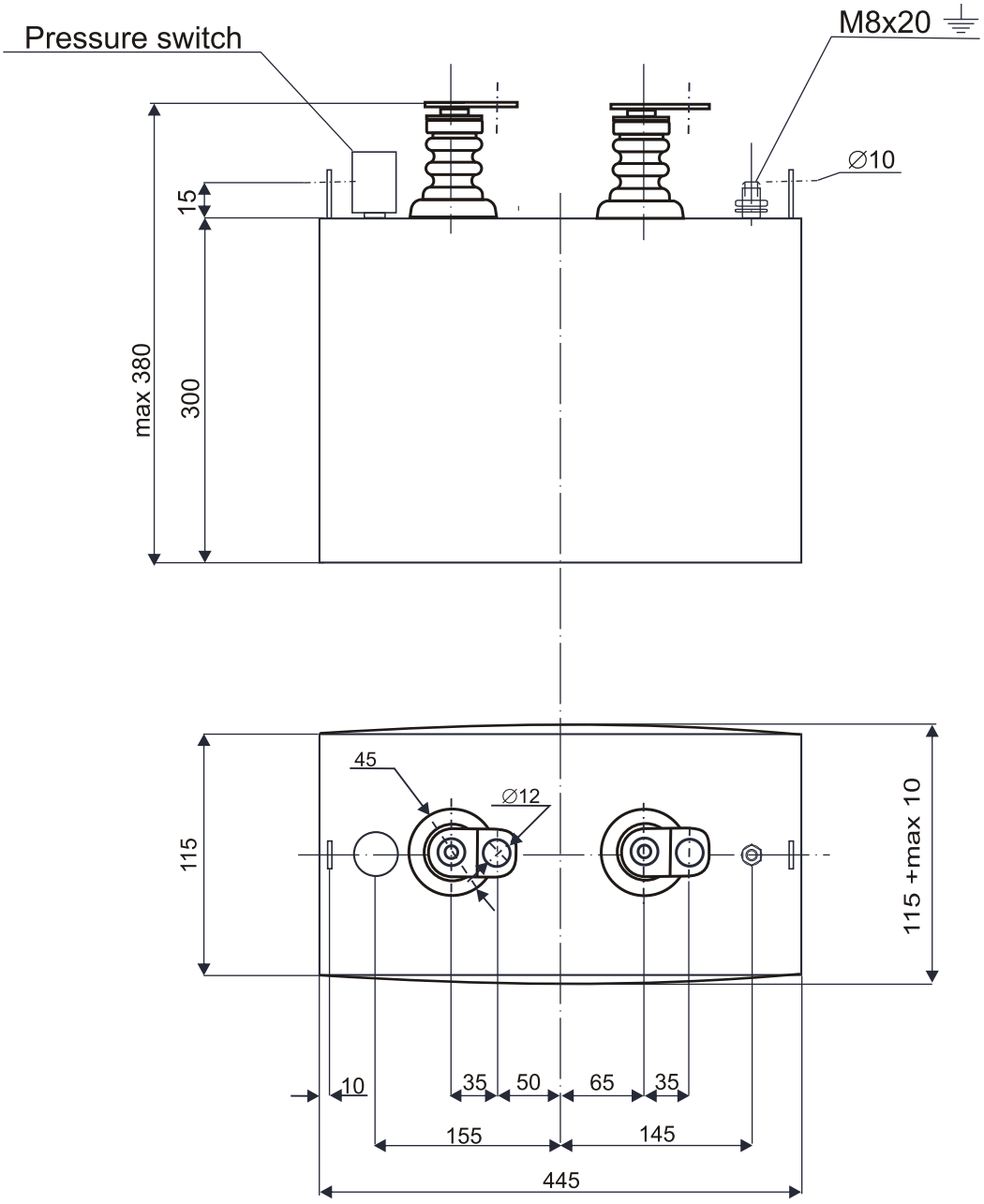

MITRA

Ltd
99-300 Kutno; 1 Grunwaldzka St.
Poland
tel./fax: +48 24 253 60 71
tel. +48 24 355 13 36
http://www.mitra.com.pl
e-mail: mitra@mitra.com.pl